BILL NO. S-91-07-02

SPECIAL ORDINANCE NO. S-189-91

AN ORDINANCE approving the awarding of Reference #1567 by the City of Fort Wayne, Indiana, by and through its Department of Purchasing and PREFERRED PRODUCTS SALES COMPANY AND D.R. FALZINE & ASSOC., INC. for the Street Light Operations Department.

NOW, THEREFORE, BE IT ORDAINED BY THE COMMON COUNCIL OF THE CITY OF FORT WAYNE, INDIANA;

SECTION 1. That Reference #1567 between the City of Fort Wayne, by and through its Department of Purchasing and **PREFERRED PRODUCTS SALES COMPANY AND D.R. FALZINE & ASSOCIATES, INC.** for the Street Light Operations Department, respectfully for:

> **the purchase of ornamental light poles and fixtures for Indiana Village PH IV through the Street Light Operations Department;**

involving a total cost of Twenty-Five Thousand Seven Hundred Thirty-Seven and 08/100 Dollars ($25,737.08) - (PREFERRED - $14,292.08; DR FALZINE - $11,445.00), all as more particularly set forth in said Reference #1567 which is on file in the Office of the Department of Purchasing, and is by reference incorporated herein, made a part hereof, and is hereby in all things ratified, confirmed and approved.

SECTION 2. That this Ordinance shall be in full force and effect from and after its passage and any and all necessary approval by the Mayor.

Councilmember

APPROVED AS TO FORM
AND LEGALITY

J. Timothy McCaulay, City Attorney

REF. NO.:	1567
DEPT.:	STREET LIGHT OPERATIONS
DATE:	7/9/91
ITEM/SERV.:	POLES AND FIXTURES

PURCHASING INFORMATION

ADVERTISED BID:	YES
DATES ADVERTISED:	6/8/91 & 6/15/91
OPENING DATE:	6/27/91
WRITTEN QUOTE:	
DUE DATE:	
VERBAL QUOTE:	
SINGLE SOURCE:	
NO. OF VENDORS NOTIFIED:	11
NO. OF VENDORS RECEIVING BID/QUOTE:	6
NO. OF VENDORS RETURNING BID/QUOTE:	2
NO. OF VENDORS DISQUALIFIED:	0
NO. OF VENDORS NOT RESPONDING:	9
DATE SENT TO DEPT FOR RECOMM.:	6/27/91
DATE RECOMMENDATION REC'D IN PURCH:	7/1/91
COUNCIL INFORMATION	DATES SENT EXTENSION DATES
DATE INFO SENT TO LAW DEPT.:	7/3/91
INTRODUCTION DATE:	07/09/91
DISCUSSION DATE:	07/16/91
PASSAGE DATE:	07/23/91
ORDINANCE NO.:	

AMOUNT APPROVED AND/OR SPENT
LAST YEAR OR CURRENT: (IF APPLICABLE)

REFERENCE NO. 1567
POLES & LUMINAIRES
6-28-91

DESCRIPTION	PREFERRED PROD		D R FALZINE	
	UNIT	TOTAL	UNIT	TOTAL
109 EA 100 W HPS GE TCIOOR	NO BID	NO BID	$105.00	$11,445.00
109 EA 16 FT ALUM OR EQUAL	$131.12	$14,292.08	$139.05	$15,156.45
TOTAL	$131.12	$14,292.08	$244.05	$26,601.45

FRONT PAGE/INVITATION TO BID
DEPARTMENT OF PURCHASING
CITY OF FORT WAYNE, ALLEN COUNTY, INDIANA
ONE MAIN STREET - ROOM 350
PHONE 219-427-1101

BID OPENING DATE 6-27-91 @ 11:00 AM BID REFERENCE # 1567

SEALED BIDS SHOULD BE DELIVERED TO DEPARTMENT OF PURCHASING, ROOM 350, CITY-COUNTY BUILDING UP TO 11:00 A.M. ON OR BEFORE OPENING DATE.

SEALED BIDS WILL BE OPENED PUBLICLY AT 11:01 A.M. IN THE BOARD OF WORKS & SAFETY CONFERENCE ROOM ON THE THIRD FLOOR OF THE CITY-COUNTY BUILDING. "NO LATE BIDS WILL BE ACCEPTED AFTER 11:00 A.M. FOR ANY REASON WHATSOEVER".

THIS INVITATION FOR BID IS FOR POLES & LUMINAIRES PER STREET LIGHTING REQUIREMENTS

AND REQUESTED BY BARRETT LAW

THIS BID REQUIRES A XXXX 5% BID BOND, CERTIFIED OR CASHIER'S CHECK OF ALL BIDDERS.

THIS BID REQUIRES A _____ 100% PERFORMANCE BOND OF SUCCESSFUL BIDDER(S).

PROMPT PAYMENT DISCOUNTS WILL BE ALLOWED AS FOLLOWS: 0 %
IF PAID WITHIN _____ DAYS. net 30 days

THIS INVITATION IS ISSUED TO ESTABLISH A CONTRACT TO SUPPLY THE CITY OF FORT WAYNE WITH A COMMODITY OR SERVICE IN ACCORDANCE WITH ACCOMPANYING SPECIFICATIONS.

THE EXECUTION HEREOF BY THE BIDDER IS ACCEPTANCE OF ALL TERMS AND CONDITIONS HEREIN AND IN THAT REGARD THE BIDDER AGREES TO BE BOUND BY SAME AND BE BOUND TO THE AMOUNT OF HIS/HER BID FOR A PERIOD OF NINETY (90) DAYS.

FIRM NAME Preferred Products Sales Company

STREET ADDRESS 3205 Devereaux Drive

CITY Indianapolis, IN 46208 PHONE # 317-293-2525

BY William E. Johnson
REPRESENTATIVE SIGNATURE
William E. Johnson

PRICE SHEET

QTY	UNIT	DESCRIPTION	UNIT	TOTAL
109	EA	100 W HPS GE TC100R POST TOP LUMINAIRE CAT# T10RS1M1AMS3BL OR EQUAL	no bid	
109	EA	16 FT BLACK ~~FIBERGLASS~~ ALUMINUM POLES ~~SHAKESPEARE CAT# BS16-01S1BE15~~ OR EQUAL HAPCO #56668-002 painted black	$ 131.12	$ 14,292.08

ALL PRICES TO BE HELD FIRM THROUGH DECEMBER 31, 1991 AWARDED BID WILL BE BASED UPON PRICES BEING HELD THROUGH THAT DATE.

PLEASE INCLUDE LITERATURE IF BIDDING EQUAL.

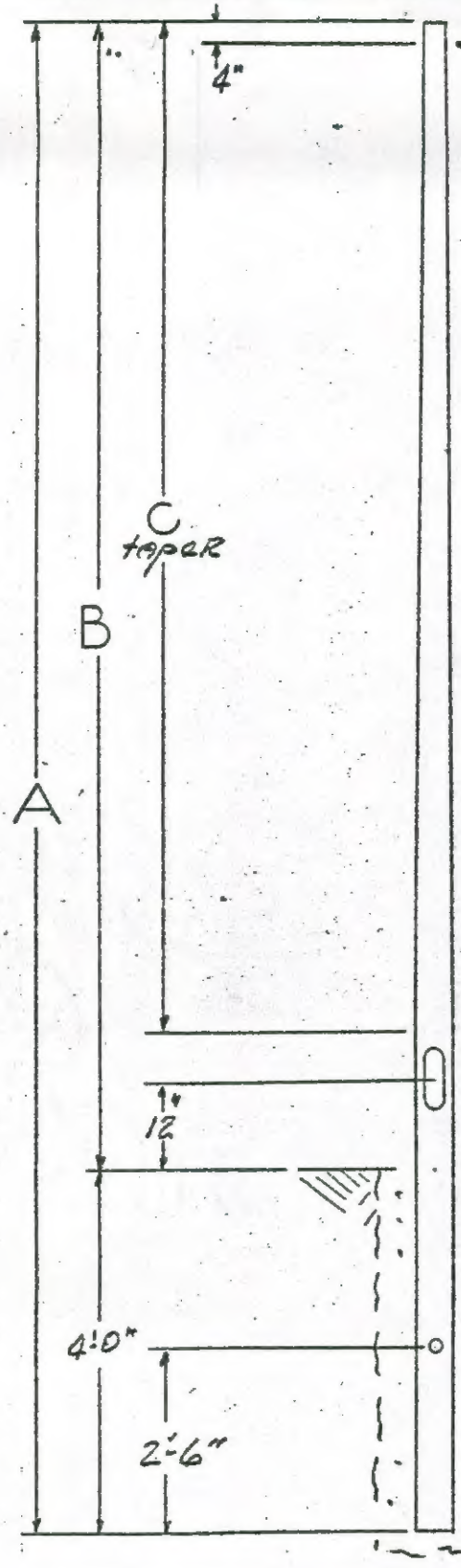

3" +0 -1/16 O.D.

Alum. "T" Extrusion with 3/8" Dia. Ground Hole Alloy 6061-T6 (56325)

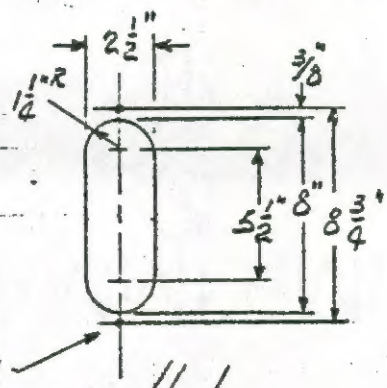

#26 Drill thru wall (2) Holes

Handhole

SECTION THRU HANDHOLE

(1) Tapered Alum. Tube .125" Wall Alloy 6063-T6 Satin Ground Finish

PAINTED BLACK

Embed Pole in Concrete and Caulk @ Surface or in "Poleset"

ITEM No.	A	B	C
566668-001	18'-0"	14'-0"	12'-6"
→ 566668-002	16'-0"	12'-0"	10'-6"

5" O.D. 2 1/2" x 8" Handhole with Cover and S.S. Screws (2) (3)

Ground Line

* Embedded 4'-0" Painted Inside & Outside, with (1) Coat of Bituminous Paint (5)

(4) 3/4" Dia. Wire Hole with 1/2" I.D. Rubber Grommet Drill 2 @ 180°

* BITUMINOUS PAINT IS NOT USED ON POLES WITH DURACRON FINISH

NO.	REVISIONS	DATE
1	TABLE & GROUNDING	6/01
	ADDED	173
2	GROUNDING	6/1/73
3	was 1/4" WIRE HOLE	3/21/73
4	was (1) WIRE HOLE @ 2'-0"	8/1/73

napco
COMPANY DIVISION OF KEARNEY-NATIONAL, INC.
P. O. BOX 547 ABINGDON, VA. 24210

TITLE Embedded Pedestal

CUSTOMER City of Fort Wayne, Ind.

SCALE N.T.S. DATE 12-16-72

BY L.W. DWG. NO. A-566668

CHK'D

Prescribed by the State Board of Accounts

Form No. 95 (Revised 1987)

BID, OFFER OR PROPOSAL FOR SALE OR LEASE OF MATERIALS

(Defined at I.C. 36-1-2-9.5)
(Please type or print)

Date: June 26, 1991

1. Governmental Unit: CITY OF FORT WAYNE
2. County: ALLEN
3. Bidder (Firm): PREFERRED PRODUCTS SALES COMPANY
   Address: 3205 DEVEREAUX DRIVE
   City/State: INDIANAPOLIS, IN 46208
4. Telephone Number: 317-293-2525
5. Agent of Bidder (If applicable): _____

Pursuant to notices given, the undersigned offers bid(s) to CITY OF FORT WAYNE (Governmental Unit) in accordance with the following attachment(s) which specify the class or item number or description, quantity, unit, unit price and total amount.

The contract will be awarded by classes or items, in accordance with specifications. Any changes or alterations in the items specified will render such bid void as to that class or item. Bidder promises that he has not offered nor received a less price than the price stated in his bid for the materials included in said bid. Bidder further agrees that he will not withdraw his bid from the office in which it is filed. A certified check or bond shall be filed with each bid if required, and liability for breach shall be enforceable upon the contract, the bond or certified check or both as the case may be.

_____
Signature of Bidder or Agent

BID OFFER OR PROPOSAL

Attach separate sheet listing each item bid based on specifications published by governing body. Following is an example of the bid format:

Class or Item	Quantity	Unit	Description	Unit Price	Amount

NON-COLLUSION AFFIDAVIT

STATE OF INDIANA)
) SS:
MARION COUNTY)

The undersigned bidder or agent, being duly sworn on oath, says that he has not, nor has any other member, representative, or agent of the firm, company, corporation or partnership represented by him, entered into any combination, collusion or agreement with any person relative to the price to be bid by anyone at such letting nor to prevent any person from bidding nor to induce anyone to refrain from bidding, and that this bid is made without reference to any other bid and without any agreement, understanding or combination with any other person in reference to such bidding.

He further says that no person or persons, firms, or corporation has, have or will receive directly or indirectly, any rebate, fee, gift, commission or thing of value on account of such sale.

PREFERRED PRODUCTS SALES CO.
Bidder (Firm)

William E. Johnson
Signature of Bidder or Agent

Subscribed and sworn to before me this 26th day of June, 1991.

My Commission Expires: 3/3/95

County of Residence: MARION

Patricha R. Williams
Notary Public

Patricha Williams
Notary Public Printed Name

ACCEPTANCE

There now being sufficient unobligated appropriated funds available, the contracting authority of _____ (Governmental Unit) hereby accepts the terms of the attached bid for classes or items numbered _____ and promises to pay the undersigned bidder upon delivery the price quoted for the materials stipulated in said bid.

Date: _____

Contracting Authority Members:

_____ _____

_____ _____

_____ _____

FRONT PAGE/INVITATION TO BID
DEPARTMENT OF PURCHASING
CITY OF FORT WAYNE, ALLEN COUNTY, INDIANA
ONE MAIN STREET - ROOM 350
PHONE 219-427-1101

BID OPENING DATE 6-27-91 @ 11:00 AM BID REFERENCE # 1567

SEALED BIDS SHOULD BE DELIVERED TO DEPARTMENT OF PURCHASING, ROOM 350, CITY-COUNTY BUILDING UP TO 11:00 A.M. ON OR BEFORE OPENING DATE.

SEALED BIDS WILL BE OPENED PUBLICLY AT 11:01 A.M. IN THE BOARD OF WORKS & SAFETY CONFERENCE ROOM ON THE THIRD FLOOR OF THE CITY-COUNTY BUILDING. "NO LATE BIDS WILL BE ACCEPTED AFTER 11:00 A.M. FOR ANY REASON WHATSOEVER".

THIS INVITATION FOR BID IS FOR POLES & LUMINAIRES PER STREET LIGHTING REQUIREMENTS.

AND REQUESTED BY BARRETT LAW

THIS BID REQUIRES A XXXX 5% BID BOND, CERTIFIED OR CASHIER'S CHECK OF ALL BIDDERS.

THIS BID REQUIRES A _____ 100% PERFORMANCE BOND OF SUCCESSFUL BIDDER(S).

PROMPT PAYMENT DISCOUNTS WILL BE ALLOWED AS FOLLOWS: _____% IF PAID WITHIN _____ DAYS.

THIS INVITATION IS ISSUED TO ESTABLISH A CONTRACT TO SUPPLY THE CITY OF FORT WAYNE WITH A COMMODITY OR SERVICE IN ACCORDANCE WITH ACCOMPANYING SPECIFICATIONS.

THE EXECUTION HEREOF BY THE BIDDER IS ACCEPTANCE OF ALL TERMS AND CONDITIONS HEREIN AND IN THAT REGARD THE BIDDER AGREES TO BE BOUND BY SAME AND BE BOUND TO THE AMOUNT OF HIS/HER BID FOR A PERIOD OF NINETY (90) DAYS.

FIRM NAME D.R. FALZINE + ASSOC., INC.

STREET ADDRESS 25000 CENTER RIDGE RD.

CITY WESTLAKE O 44145 PHONE # 216-899-0884

BY David R. Falzine
REPRESENTATIVE SIGNATURE

PRICE SHEET

QTY	UNIT	DESCRIPTION	UNIT	TOTAL
109	EA	100 W HPS GE TC100R POST TOP LUMINAIRE CAT# T10RS1M1AMS3BL OR EQUAL CROUSE HINDS # LXF10SM233BK	$105.00	$11,445.00
109	EA	16 FT BLACK FIBERGLASS POLES SHAKESPEARE CAT# BS16-01S1BE15 OR EQUAL	$139.05	$15,156.45

ALL PRICES TO BE HELD FIRM THROUGH DECEMBER 31, 1991 AWARDED BID WILL BE BASED UPON PRICES BEING HELD THROUGH THAT DATE.

PLEASE INCLUDE LITERATURE IF BIDDING EQUAL.

NOTE #1 PRICES ARE FIRM THROUGH 12-31-91

#2 FREIGHT IS PREPAID AND ALLOWED ON EACH ITEM

#3 TERMS ARE NET 30 DAYS

#4 DELIVERY CAN BE 2-3 WEEKS ON EACH ITEM

#5 CATALOG CUT OF ITEM #1 ATTACHED,

#6 BID BOND CHECK # 24065 FOR 5% OF THE BID WHICH IS $1330.07 IS ATTACHED,

Prescribed by the State Board of Accounts

Form No. 95 (Revised 1987)

BID, OFFER OR PROPOSAL FOR SALE OR LEASE OF MATERIALS

(Defined at I.C. 36-1-2-9.3)
(Please type or print)

Date: _____

1. Governmental Unit: _____
2. County: _____
3. Bidder (Firm): D.R. FALZINE & ASSOCIATES INC.
   Address: 2300 CENTER RIDGE RD.
   City/State: WESTLAKE OHIO 44145
4. Telephone Number: 216-899-0884
5. Agent of Bidder (If applicable): _____

Pursuant to notices given, the undersigned offers bid(s) to CITY OF FT WAYNE (Governmental Unit) in accordance with the following attachment(s) which specify the class or item number or description, quantity, unit, unit price and total amount.

The contract will be awarded by classes or items, in accordance with specifications. Any changes or alterations in the items specified will render such bid void as to that class or item. Bidder promises that he has not offered nor received a less price than the price stated in his bid for the materials included in said bid. Bidder further agrees that he will not withdraw his bid from the office in which it is filed. A certified check or bond shall be filed with each bid if required, and liability for breach shall be enforceable upon the contract, the bond or certified check or both as the case may be.

David R. Falzine
Signature of Bidder or Agent

BID OFFER OR PROPOSAL

Attach separate sheet listing each item bid based on specifications published by governing body. Following is an example of the bid format:

Class or Item	Quantity	Unit	Description	Unit Price	Amount

NON-COLLUSION AFFIDAVIT

STATE OF INDIANA)
) SS:
_____ COUNTY)

The undersigned bidder or agent, being duly sworn on oath, says that he has not, nor has any other member, representative, or agent of the firm, company, corporation or partnership represented by him, entered into any combination, collusion or agreement with any person relative to the price to be bid by anyone at such letting nor to prevent any person from bidding nor to induce anyone to refrain from bidding, and that this bid is made without reference to any other bid and without any agreement, understanding or combination with any other person in reference to such bidding.

He further says that no person or persons, firms, or corporation has, have or will receive directly or indirectly, any rebate, fee, gift, commission or thing of value on account of such sale.

D.R. FALZINE & ASSOC. INC,
Bidder (Firm)
David R. Falzine
Signature of Bidder or Agent

Subscribed and sworn to before me this 26 day of June, 1991.

My Commission Expires: 12-14-94

County of Residence: CUYAHOGA

ELISABETH G.M. GASPER
Notary Public, State of Ohio
Recorded in Cuyahoga County
My Commission Expires December 14, 1994

ELISABETH G.M. GASPER
Notary Public, State of Ohio
Recorded in Cuyahoga County
My Commission Expires Dec. 14, 1

ACCEPTANCE

There now being sufficient unobligated appropriated funds available, the contracting authority of _____ (Governmental Unit) hereby accepts the terms of the attached bid for classes or items numbered _____ and promises to pay the undersigned bidder upon delivery the price quoted for the materials stipulated in said bid.

Date: _____

Contracting Authority Members:

_____ _____
_____ _____
_____ _____

Read the first time in full and on motion by Gia Quinta, seconded by Redd, and duly adopted, read the second time by title and referred to the Committee on Finance (and the City Plan Commission for recommendation) and Public Hearing to be held after due legal notice, at the Council Conference Room 128, City-County Building, Fort Wayne, Indiana, on _____, the _____, day of _____, 19____, at _____ o'clock ____.M.,E.S.T.

DATED: 7-9-91

Sandra E. Kennedy
SANDRA E. KENNEDY, CITY CLERK

Read the third time in full and on motion by Gia Quinta, seconded by Redd, and duly adopted, placed on its passage. ~~PASSED~~ ~~LOST~~ by the following vote:

	AYES	NAYS	ABSTAINED	ABSENT
TOTAL VOTES	9			
BRADBURY	✓			
BURNS	✓			
EDMONDS	✓			
GiaQUINTA	✓			
HENRY	✓			
LONG	✓			
REDD	✓			
SCHMIDT	✓			
TALARICO	✓			

DATED: 7-23-91.

Sandra E. Kennedy
SANDRA E. KENNEDY, CITY CLERK

Passed and adopted by the Common Council of the City of Fort Wayne, Indiana, as ~~(ANNEXATION)~~ ~~(APPROPRIATION)~~ (GENERAL) (SPECIAL) ~~(ZONING MAP)~~ ORDINANCE ~~RESOLUTION~~ NO. S-189-91 on the 23rd day of July, 19 91,

ATTEST
Sandra E. Kennedy
SANDRA E. KENNEDY, CITY CLERK

SEAL
Samuel J. Talarico
PRESIDING OFFICER

Presented by me to the Mayor of the City of Fort Wayne, Indiana, on the 24th day of July, 19 91, at the hour of 11:20 o'clock A.M.,E.S.T.

Sandra E. Kennedy
SANDRA E. KENNEDY, CITY CLERK

Approved and signed by me this 24th day of July, 19 91, at the hour of 2:15 o'clock P.M.,E.S.T.

PAUL HELMKE, MAYOR

DIGEST SHEET

TITLE OF ORDINANCE: Special

DEPARTMENT REQUESTING ORDINANCE: Purchasing

SYNOPSIS OF ORDINANCE: An ordinance approving the award of Ref. No. 1567 for the purchase of ornamental light poles and fixtures for the Street Light Operations Department. The cost reflects the lowest and most responsive of two (2) vendors.

IF NOT LOWEST, WHO WAS AND WHY WERE THEY NOT AWARDED:

EFFECT OF PASSAGE: Purchase of ornamental light poles and fixtures for Indian Village PH IV (37 poles and fixtures) and Lincoln Village PH I (72 poles and fixtures).

IF REPLACEMENT, WHAT NECESSITATES: These poles and fixtures will be used for new construction.

EFFECT OF NON-PASSAGE: Two street lighting projects, Indian Village PH IV and Lincoln Village PH I, will not be able to be completed.

PRIOR APPROVAL REQUESTED: S-9/07-02

MONIES INVOLVED:

Pref. Prod.	$14,292.08
DR Falzine	$11,445.00

PRICE AGREEMENT:

PURCHASE ORDER: Yes

ACCOUNT INFORMATION: Barrett Law

PRIOR APPROVAL: DATE:
(IF APPLICABLE)

BILL NO. S-91-07-02

REPORT OF THE COMMITTEE ON FINANCE

MARK E. GiaQUINTA, CHAIRMAN
DONALD J. SCHMIDT, VICE CHAIRMAN
BRADBURY, REDD, BURNS

WE, YOUR COMMITTEE ON FINANCE TO WHOM WAS

REFERRED AN (ORDINANCE) (~~RESOLUTION~~) approving the awarding of Reference #1567 by the City of Fort Wayne, Indiana, by and through its Department of Purchasing and PREFERRED PRODUCTS SALES COMPANY AND D.R. FALZINE & ASSOC., INC. for the Street Light Operations Department

HAVE HAD SAID (ORDINANCE) (~~RESOLUTION~~) UNDER CONSIDERATION AND BEG LEAVE TO REPORT BACK TO THE COMMON COUNCIL THAT SAID (ORDINANCE) (~~RESOLUTION~~)

DO PASS	DO NOT PASS	ABSTAIN	NO REC
Mark E. GiaQuinta			
Charles Redd			
D. J. Schmidt			
Paul M. Burns			
J. G. Bradbury			

DATED: 7-23-91.

Sandra E. Kennedy
City Clerk